LANDSCAPE NOTES:

1. LANDSCAPE:

A. GENERAL: CONDITIONS AND REQUIREMENTS

1) WORK TO INCLUDE FURNISHING LABOR, MATERIALS, TOOLS AND EQUIPMENT, OBTAINING NECESSARY PERMITS; INSTALLING ALL MATERIALS NECESSARY TO COMPLETE IN PLACE THE LANDSCAPING AS SHOWN ON THE PLANS AND AS HEREIN SPECIFIED.

2) THE INSTALLATION SHALL COMPLY WITH ALL REGULATIONS OF THE CITY OF POMPANO BEACH FLORIDA. ALL LICENSES, PERMITS AND INSPECTIONS REQUIRED SHALL BE OBTAINED AND PAID FOR BY THE CONTRACTOR. AT COMPLETION OF THE WORK, THE CONTRACTOR WILL TRANSMIT ALL APPLICABLE CERTIFICATES OF INSPECTION TO THE OWNER, OR AUTHORIZED REPRESENTATIVE.

3) THE CONTRACTOR AND THE LANDSCAPE SUBCONTRACTOR SHALL PROVIDE A QUALIFIED FOREMAN PRESENT ON THE SITE AT ALL TIMES. THE FOREMAN SHALL BE WELL-VERSED IN READING AND UNDERSTANDING PLANS. THE LANDSCAPE FOREMAN SHALL BE KNOWLEDGEABLE ABOUT SOUTH FLORIDA PLANT MATERIAL AND ITS PROPER HANDLING. THE FOREMAN SHALL BE A FULLY AUTHORIZED AGENT OF THE CONTRACTOR, CAPABLE OF MAKING ON-SITE DECISIONS.

B. MATERIALS:

1) PLANT SIZES: ALL SIZES SHOWN FOR PLANT MATERIALS ON THE PLAN ARE TO BE CONSIDERED AS MINIMUMS. ALL PLANT MATERIAL MUST MEET OR EXCEED THESE MINIMUM REQUIREMENTS FOR BOTH HEIGHT AND SPREAD. ANY OTHER REQUIREMENTS FOR SPECIFIC SHAPE OR EFFECT AS NOTED ON THE PLAN WILL ALSO BE REQUIRED FOR ACCEPTANCE.

2) PLANT QUALITY: ALL PLANT MATERIAL INSTALLED SHALL CONFORM TO THE GRADES AND STANDARDS FOR FLORIDA NO. 1 OR BETTER AS GIVEN IN GRADES AND STANDARDS FOR NURSERY PLANTS, PART I, 1998 EDITION BY THE FLORIDA DEPARTMENT OF AGRICULTURE AND CONSUMER SERVICE DIVISION OF THE PLANT INDUSTRY.

3) PLANTS NOT LISTED IN "GRADES AND STANDARDS FOR NURSERY PLANTS" SHALL CONFORM TO THE FLORIDA STANDARDS SPECIFIED FOR PLANTS LISTED WITH SIMILAR GROWTH HABITS. THE PLANT STANDARDS TO BE MET INCLUDE FREEDOM FROM PEST AND MECHANICAL DAMAGE, FOLIAGE CONDITIONS, TRUNK AND BRANCHING HABIT, AND ROOT CONDITION.

4) BALLED AND BURLAPPED (B&B) PLANTS SHALL BE HANDLED BY THE ROOTBALL ONLY. PLANTS WITH CRACKED OR LOOSE ROOTBALLS WILL NOT BE ACCEPTED. ROOTBALLS ARE TO BE A SIZE NORMAL TO SOUND NURSERY PRACTICE. ROOT SYSTEMS SHALL BE WELL-BRANCHED AND FIBROUS.

5) CONTAINER GROWN PLANTS SHALL BE WELL-ROOTED. PLANTS THAT ARE ROOTBOUND OR ARE DISPROPORTIONATELY LARGE FOR THE CONTAINER SIZE WILL NOT BE ACCEPTED.

6) PLANTS GROWN IN FLATS SHALL BE WELL-ROOTED AND HEAVILY FOLIAGED.

7) ROOT PRUNING: PLANTS SHALL BE ROOTPRUNED OR PREPARED AS NECESSARY TO AVOID TRANSPLANTING CAUSED DIEBACK, OR DEFOLIATION IN EXCESS OF TWENTY-FIVE PERCENT UNLESS ATTRIBUTED TO SEASONAL CHANGE. PLANTS EXHIBITING THESE CHARACTERISTICS WILL BE REMOVED AT THE REQUEST OF THE OWNER, OR AUTHORIZED REPRESENTATIVE.

8) PALMS: ALL PALMS SHALL BE FLORIDA GRADE NO. 1, OR BETTER, AS SPECIFIED IN "GRADES AND STANDARDS FOR NURSERY PLANTS" PART II.

UNLESS OTHERWISE SPECIFIED, ALL NON-SABAL PALMETTO SHALL BE FREE OF FROND BOOTS. PALMS WITH BURNED OR IRREGULAR TRUNKS, TRUNKS WITH NAILS IN THEM, OR CABLE AND OTHER MECHANICAL SCARS WILL BE UNACCEPTABLE. REMOVE ALL DEAD FRONDS AND TAPER TRIM BY NO MORE THAN ONE-THIRD OF PALM HEAD. TIE ALL SABAL PALMETTO HEADS TO PROTECT THE BUD WITH UNTREATED ORGANIC TWINE AS SET FORTH IN FLORIDA DEPARTMENT OF AGRICULTURE'S "GRADES AND STANDARDS FOR NURSERY PLANTS". SEE NOTES ON PLANS FOR PALMS TO BE RELOCATED ON-SITE.

9) SUBSTITUTIONS: SUBSTITUTIONS OF PLANT TYPE OR SIZE WILL NOT BE ACCEPTED UNLESS SUBSTANTIAL DOCUMENTATION IS SUBMITTED SHOWING THE UNAVAILABILITY OF THE PARTICULAR PLANT TYPE OR SIZE. CONTACT DEPT. OF LANDSCAPE ARCHITECTURE, CITY OF PLANTATION FOR SUBSTITUTIONS.

10) PLANTING SOIL: ALL PLANT MATERIAL INSTALLED SHALL BE PLANTED WITH TOPSOIL THAT IS CLEAN AND REASONABLY FREE OF CONSTRUCTION DEBRIS, WEEDS, VIABLE WEED SEEDS, NOXIOUS PESTS, ROCKS, DISEASE, AND MATERIALS. THE TOPSOIL IS TO BE AMENDED WITH THIRTY PERCENT MUCK. THE MUCK IS TO BE FREE OF EXCESS CALCIUM AND HAVE A LIGHT ACID REACTION (5.5 TO 6.5 PH). SEE STANDARD CITY OF PLANTATION NOTES, this SHEET.

11) MULCH: ALL MULCH SHALL BE FLORAMULCH MELALEUCA MULCH OF UNIFORM SIZE AND APPEARANCE.

C: INSTALLATION:

1) PLANTING BEDS: THE PLANTING BEDS SHALL BE PREPARED TO PROVIDE ADEQUATE DRAINAGE FOR GOOD PLANT GROWTH. THE CONTRACTOR SHALL REPORT IN WRITING ANY CONTAMINANTS DISCOVERED IN A PLANTING BED THAT WOULD INHIBIT GOOD PLANT GROWTH TO THE OWNER, OR HIS AGENT, PRIOR TO PLANTING IN SUCH A CONTAMINATED PLANT BED.

2) FERTILIZER: TREES AND SHRUBS SHALL BE FERTILIZED WITH 21 GRAM AGRIFORM FERTILIZER TABLETS WITH A 20-10-5 NITROGEN, PHOSPHOROUS, AND POTASSIUM ANALYSIS AT THE APPLICATION RATES AS FOLLOWS:

CONTAINER SIZE:	APPLICATION RATE:
#1 CONTAINER	1 TABLET
#3 CONTAINER	2 TABLETS
#5 CONTAINER	3 TABLETS
#7 CONTAINER	5 TABLETS
B&B SHRUBS AND SHRUBS IN LARGE CONTAINERS	1 TABLET FOR EACH ONE FOOT OF HEIGHT
TREES	1 TABLET FOR EACH 1/2 INCH OF TRUNK DIAMETER MEASURED 18" ABOVE FINISHED GRADE

FERTILIZE GROUNDCOVER AREAS WITH AN EQUAL ANALYSIS OF GRANULAR FERTILIZER SUCH AS 6-6-6 AND THE NITROGEN DERIVED FROM UREAFORM. MINOR ELEMENTS SHALL INCLUDE IRON, ZINC, AND MANGANESE. INCORPORATE INTO THE TOP EIGHT (8) INCHES OF SOIL AT THE RATE RECOMMENDED BY THE MANUFACTURER FOR NEW PLANT BEDS.

PALMS SHALL BE FERTILIZED WITH A MINIMUM FIFTY PERCENT ORGANIC FERTILIZER CONTAINING NITROGEN, PHOSPHOROUS AND POTASSIUM AS MAJOR ELEMENTS AND CONTAINING MINOR ELEMENTS INCLUDING IRON, MANGANESE, MAGNESIUM AND ZINC. APPLICATION SHALL BE ACCORDING TO MANUFACTURER'S SPECIFICATIONS.

AREAS TO BE SODDED SHALL BE FERTILIZED WITH A FIFTY PERCENT ORGANIC 6-6-6 NITROGEN, PHOSPHOROUS, AND POTASSIUM ANALYSIS FERTILIZER WITH IRON, MAGNESIUM AND MANGANESE AS MINOR ELEMENTS. APPLICATION SHALL BE AT THE RATE OF ONE POUND OF ACTUAL NITROGEN PER ONE THOUSAND SQUARE FEET AND SHALL BE FULLY INCORPORATED INTO THE TOP TWO INCHES OF SOIL.

3) MULCH: ALL TREES IN SOD AREAS ARE TO HAVE A 4' RING COVERED WITH A TWO TO THREE INCH LAYER OF MELALEUCA MULCH. COVER ALL SHRUB BEDS WITH A TWO TO THREE INCH LAYER OF MELALEUCA MULCH. MULCH PLANTS WITHIN TWENTY-FOUR HOURS OF PLANTING.

4) WATERING: HAND WATERING SHALL BE DONE AS NEEDED TO KEEP THE PLANT ROOT MASSES AND PLANTING SOIL UNIFORMLY MOIST TO MAINTAIN A HEALTHY GROWING CONDITION UNTIL FINAL JOB ACCEPTANCE BY THE OWNER, OR AUTHORIZED REPRESENTATIVE. ANY PLANTS WITH ROOT MASSES THAT DRY OUT WILL NOT BE ACCEPTABLE.

5) SODDING: PLACE ST. AUGUSTINE 'FLORITAM' SOLID SOD IN ALL AREAS NOT COVERED WITH PLANT MATERIAL OR PAVING AS NOTED ON THE PLANS. THE SOD AND SOD BED SHALL BE MOIST AT TIME OF INSTALLATION.

THE SOD SHALL BE THICK, WELL-MATTED AND EVENLY CUT. THE SOD SHALL BE STRONG ENOUGH SO IT RETAINS ITS SHAPE WHEN HANDLED BY THE TOP GRASS BLADES. THE SOD PIECED SHALL BE A MINIMUM 12" X 24" SIZE. THE SOD BED IS TO BE WELL-COMPACTED AND EVEN. THE SOD SHALL BE LAID BY HAND SO THERE ARE NO GAPS OR VOIDS BETWEEN PIECES. STAGGER THE SOD PIECES BETWEEN ROWS. ON SLOPES, THE ROWS SHALL RUN 90° TO THE SLOPE DIRECTION. ROLL OR HAND TAMP THE SOD IMMEDIATELY AFTER INSTALLATION AND COMMENCE WATERING. THE SOD LEVEL SHALL BE SET SO WATERFLOW FROM ADJACENT SURFACES IS NOT IMPEDED. MAINTENANCE OF THE SOD WILL BE THE RESPONSIBILITY OF THE CONTRACTOR UNTIL ACCEPTANCE BY THE OWNER, OR AUTHORIZED REPRESENTATIVE. MOWING SHALL BE DONE OFTEN ENOUGH SO NO MORE THAN ONE-THIRD THE HEIGHT OF THE GRASS BLADE IS REMOVED. THE SOD SHALL BE GUARANTEED FREE OF WEEDS AND PESTS THAT AFFECT ITS UNIFORM APPEARANCE FOR NINETY DAYS. SOD LINES AT SHRUB BEDS, TREE RINGS AND PAVEMENTS SHALL BE CUT EVEN AND SHARP.

6) TREE GUYING: ALL SINGLE STEM TRESS SHALL BE SECURELY GUYED AND STAKED AT TIME OF PLANTING, USING THREE 3/8" DIAMETER SISAL. STAKES ARE TO BE SET BELOW FINISHED GRADE.

TREE WITH NAILS IN THEIR TRUNKS OR TREES WITH OTHER MECHANICAL TRUNK DAMAGE WILL NOT BE ACCEPTABLE.

7) PLANTING: REMOVE THE EXCAVATED MATERIAL FROM THE PLANT HOLES AND REPLACE WITH PLANTING SOIL. SOD PLANTING AREAS ARE TO HAVE A CONTINUOUS TWO INCHES DEPTH OF PLANTING SOD. GROUNDCOVER PLANTING AREAS ARE TO BE EXCAVATED TO A DEPTH OF SIX INCHES. SHRUB PLANTING AREAS ARE TO BE EXCAVATED SIX INCHES DEEPER THAN THE ROOT DEPTH AND SIX INCHES GREATER IN RADIUS. TRENCH HEDGE PLANTING STRIPS SIX INCHES DEEPER THAN THE ROOT DEPTH AND SIX INCHES WIDER ON EACH SIDE OF THE PLANTS.

8) PRUNING: ALL PRUNING SHALL BE DONE IN ACCORDANCE WITH STANDARDS SET FORTH BY THE INTERNATIONAL SOCIETY OF ABORICULTURE. LIMIT PRUNING TO BROKEN OR DAMAGE STEMS. PRUNE BACK TO THE PARENT STEM IF NECESSARY TO COMPENSATE FOR ROOTS LOST IN TRANSPLANTING. NO PRUNING SHALL BE DONE TO ADVERSELY AFFECT THE NATURAL HABIT OR SHAPE OF PLANTS UNLESS OTHERWISE SPECIFIED. ROOTS THAT ARE BROKEN OR JAGGED SHALL BE CUT CLEANLY. THE OWNER OR AUTHORIZED REPRESENTATIVE RESERVES THE RIGHT TO REQUIRE ADDITIONAL PRUNING FOR AESTHETIC OR OTHER REASONS.

D. FINAL COMPLETION: THE CONTRACTOR SHALL BE RESPONSIBLE FOR LEAVING THE JOB SITE FREE OF ALL CONSTRUCTION DEBRIS AND IN AN ORDERLY STATE. CLEAN ALL WALKS, PAVING, AND SITE FEATURES OF DIRT, TIRE MARKS AND OTHER DEBRIS. WEEDING OF PLANT BEDS, PRUNING OF SHRUBS, CUTTING AND TRIMMING OF GRASS WILL BE DONE UNTIL THE JOB IS COMPLETE AND ACCEPTED BY THE OWNER OR AUTHORIZED REPRESENTATIVE. UNTIL FINAL ACCEPTANCE, THE PLANT MATERIALS ARE THE SOLE RESPONSIBILITY OF THE CONTRACTOR.

E. GUARANTEE: ALL PLANT MATERIAL AND WORK SHALL BE GUARANTEED FOR ONE YEAR FROM DATE OF FINAL JOB ACCEPTANCE. DURING THE ONE YEAR GUARANTEE, ANY PLANT MATERIAL THAT DIES, OR IS IN AN UNHEALTHY CONDITION SHALL BE REPLACED WITH THE SAME PLANT TYPE AT LEAST EQUAL TO THE SIZE AND QUALITY ORIGINALLY SPECIFIED. THE REPLACEMENT MATERIAL SHALL ALSO BE GUARANTEED FOR ONE YEAR FROM THE DATE OF ITS INSTALLATION. THE GUARANTEE WILL BE NULL AND VOID IF PLANT MATERIAL IS DAMAGED OR KILLED BY LIGHTNING, HURRICANE FORCE WINDS, HAIL OR FREEZE.

F. EXCESS SUITABLE MATERIAL: UPON DIRECTION OF THE OWNER, OR AUTHORIZED REPRESENTATIVE, ALL VEGETATION, DEBRIS, CONCRETE, OR OTHER UNSUITABLE MATERIALS SHALL BE DISPOSED IN A SUITABLE MANNER BY THE CONTRACTOR.

NOTES:

CONTRACTOR SHALL BE RESPONSIBLE FOR LOCATING ALL UTILITIES. CARE SHOULD BE TAKEN NOT TO DISTURB OR DAMAGE ANY UTILITIES. ANY DAMAGE TO THESE FACILITIES WILL BE REPAIRED AT THE EXPENSE OF THE CONTRACTOR IN A MANNER APPROVED BY THE OWNER'S REPRESENTATIVE. WHERE UNDERGROUND CONSTRUCTION OR OBSTRUCTIONS WILL NOT PERMIT THE INSTALLATION PER PLANS, NEW LOCATIONS FOR THE PLANT MATERIAL WILL BE DESIGNATED BY THE LANDSCAPE ARCHITECT.

TREE LOCATIONS ARE TO BE STAKED IN THE FIELD PRIOR TO INSTALATION. LOCATIONS ARE SCHEMATIC AND MAY REQUIRE ADJUSTMENT IN EVENT OF CONFLICTS WITH UTILITIES, EXISTING PLANT MATERIAL, ETC., LANDSCAPE ARCHITECT TO APPROVE FINAL LOCATIONS PRIOR TO PLANTING.

ALL PLANT MATERIAL INSTALLED SHALL CONFORM TO THE GRADES AND STANDARDS FOR FLORIDA NO.1 OR BETTER AS GIVEN IN GRADES AND STANDARDS FOR NURSERY PLANTS, PART I, 1998 EDITION BY THE FLORIDA DEPARTMENT OF AGRICULTURE AND CONSUMER SERVICE DIVISION OF THE PLANT INDUSTRY.

ALL TREES AND PALMS TO BE THOROUGHLY WATERED IN AT PLANTING. TREES AND PALMS SHALL BE STAKED TO ASSURE PROPER ALIGNMENT AND STABILITY.

CONTRACTOR SHALL BE RESPONSIBLE FOR VERIFYING ALL QUANTITIES FOR MATERIAL SHOWN ON DRAWINGS PRIOR TO SUBMITTING BID. PLANTING PLAN TO TAKE PRECEDENCE OVER PLANT LIST. FINAL SOD, MULCH, AND TOPSOIL QUANTITIES ARE TO BE MADE BY THE CONTRACTOR.

ALL PLANT MATERIAL SHALL BE FLORIDA NO. 1 OR BETTER ACCORDING TO GRADES AND STANDARDS FOR NURSERY PLANTS. ALL TREES THAT ARE DESIGNATED AS SINGLE-TRUNK TREES SHALL HAVE A SINGLE, DOMINENT LEADER, PROPER STRUCTURAL BRANCHING AND EVEN DISTRIBUTION OF THEIR BRANCHES AND A RELATIVELY STRAIGHT TRUNK. TREES THAT ARE DESIGNATED AS MULTI-TRUNK TREES SHALL HAVE AT LEAST THREE TRUNKS WITH EQUAL CALIPERS ORIGINATING AT THE BASE OF THE TREES, AND WITH ANGLES NO LESS THAN 45 DEGREES. TREES WITH BARK INCLUSION AND CO-DOMINENT TRUNKS AT ANY HEIGHTS WILL NOT BE ACCEPTED. TREES WITH GIRDLING ROOTS WILL BE CONSIDERED CULLS AND THEREFORE REJECTED.

ALL TREES AND PALMS MUST BE PLANTED SO THAT THE TOP OF THE ROOTBALL, ROOT FLAIR, AND FIRST ORDER ROOTS ARE AT THE SAME LEVEL OR SLIGHTLY ABOVE THE FINAL GRADE. (ADVENTITIOUS ROOTS ARE NOT CONSIDERED FIRST ORDER ROOTS).

ALL SYNTHETIC BURLAP, SYNTHETIC STRING OR CORDS SHALL BE REMOVED FROM THE ROOTBALLS BEFORE ANY TREES ARE PLANTED. THE TOP PORTION OF BURLAP MUST BE REMOVED FROM THE TOP OF THE ROOTBALLS. THE TOP 1/3RD OF WORE BASKETS SHALL BE REMOVED, THE BOTTOM 2/3RDS SHALL BE CUT BEFORE THE TREES ARE INSTALLED.

ALL SYNTHETIC TAPE (i.e. TAGGING TAPE, NURSEY TAPE) SHALL BE REMOVED FROM TRUNKS, BRANCHES, ETC. BEFORE INSPECTION. REMOVE ALL BAMBOO AND METAL STAKES FROM THE TREES.

TREES SHALL HAVE A MULCH RING OF A MIN. OF 4' DIAMETER. MULCH SHALL HAVE A MIN. DEPTH OF 2" AND A MAX. DEPTH OF 3". ALL PLANTING BEDS MUST BE MULCHED. MULCH SHALL BE KEPT 3" FROM THE BASE OF ALL PLANT MATERIAL. CYPRESS MULCH, RED, GOLD AND GREEN MULCH IS PROHIBITED. OTHER CLEAN HARDWOOD SPECIES OR CLEAN RECYCLED MULCH MAY BE USED. ESTABLISH CLEAN PLANTING BED LINES > 1 1/2' ON EITHER SIDE OF THE PLANT MATERIAL FOR MAINTENANCE.

ALL TREES AND PALMS SHALL BE GUYED WITH PROPER HORTICULTURAL TECHNIQUES. DO NOT USE WIRE, BLACK STRAPPING, OR OTHER SYNTHETIC MATERIAL FOR THE STAKING OF TREES. PLEASE USE BIODEGRADABLE MATERIAL FOR STAKING. NAILING INTO TREES AND PALMS FOR ANY REASON IS PROHIBITED. ALL STAKING MATERIAL SHALL BE REMOVED ONCE TREES ARE ESTABLISHED.

ALL LANDSCAPE AREAS SHALL BE PROVIDED WITH AN AUTOMATICALLY-OPERATING UNDERGROUND IRRIGATION SYSTEM; WITH A MIN. OF 100% COVERAGE, WITH 50% MIN, OVERLAP IN GROUND COVER AND SHRUB AREAS. THE RAIN SENSOR MUST BE INSTALLED AND OPERATIONAL AS WELL AS THE RUST INHIBITOR IS APPLICABLE.

ALL UTILITY EQUIPMENT, SUCH AS FPL BOXES, CABLE TV BOXES, BACKFLOW PREVENTERS, IRRIGATION EQUIPMENT, AND AIR CONDITIONER UNITS SHALL BE SCREENED WITH APPROPRIATE PLANT MATERIAL.

WHERE APPLICABLE, TREE REMOVAL AND/OR TREE RELOCATION PERMITS MUST BE OBTAINED PRIOR TO ANY WORK BEING DONE ON THE PROPERTY.

PLEASE FOLLOW APPROVED LANDSCAPE PLANS FOR SPECIES, SIZES, LOCATIONS, QUANTITIES, QUALITY, ETC. IF YOU ARE UNABLE TO LOCATE PLANT MATERIAL AT REQUIRED SPECIFICATIONS PLEASE CONTACT LANDSCAPE ARCHITECT PRIOR TO ANY CHANGES BEING MADE.

1. 3" OF CLEAN MULCH IN A 5' DIAMETER RING WITH A 3" HIGH CONTINUOUS WATER EARTH BERM. KEEP MULCH 3" FROM TRUNKS AND STEMS OF ALL VEGETATON. THE USE OF CYPRESS OR RED MULCH IS PROHIBITED.
2. PLANTING HOLE SHALL BE TWICE AS WIDE AT THE FRONT BALL AND NO DEEPER THAN THE HEIGHT OF THE ROOT BALL. THE TOP OF THE ROOT BALL SHALL BE APPROXIMATELY 1" ABOVE THE FINISH GRADE. THE TRUNK FLAIR MUST BE VISIBLE ABOVE GRADE.
3. FINISH GRADE.
4. EXISTING UNDISTURBED SOIL.
5. 3 STRANDS OF 3/4" DIAMETER BIODEGRADABLE ROPE TIED TO EACH TREE AND SUPPORTED IN THE GROUND WITH 3- 1" X 2" X 1" BURIED SO TOP IS 1" BELOW GRADE.
6. TILL AND LOOSEN SOIL TO A DEPTH OF 8" WITH A RADIUS OF 5' FROM TRUNK TO TREE.
7. PLACE SOIL AMENDMENTS (I.E. "TERRASORB", FERTILIZER TABLETS) IN THE TOP 8" OF THE PLANTING HOLE.
8. REMOVE TOP 1/3 OF THE NATURAL BURLAP AND WIRE BASKET COMPLETELY. IF WIRE BASKETS CANNOT BE REMOVED DUE TO ROOT BALL STABILITY, SLICE THE BASKET TO THE BOTTOM OF THE ROOT BALL ON A MIN. OF FOUR SIDES.
9. BACHFILL TO BE 70% SAND, 30% MUCK,
10. SINGLE DOMINENT LEADER. GOOD STRUCTURE. FLORIDA #1 OR BETTER.
11. TILL AND LOOSEN EXISTING SOIL TO A DEPTH OF 8" IN ALL PLANTING BEDS THEN TILL IN 4" OF PLANTING SOIL THROUGHOUT.
12. ROOT BARRIER SYSTEM AS INDICATED ON THE PLANS IF APPLICABLE.

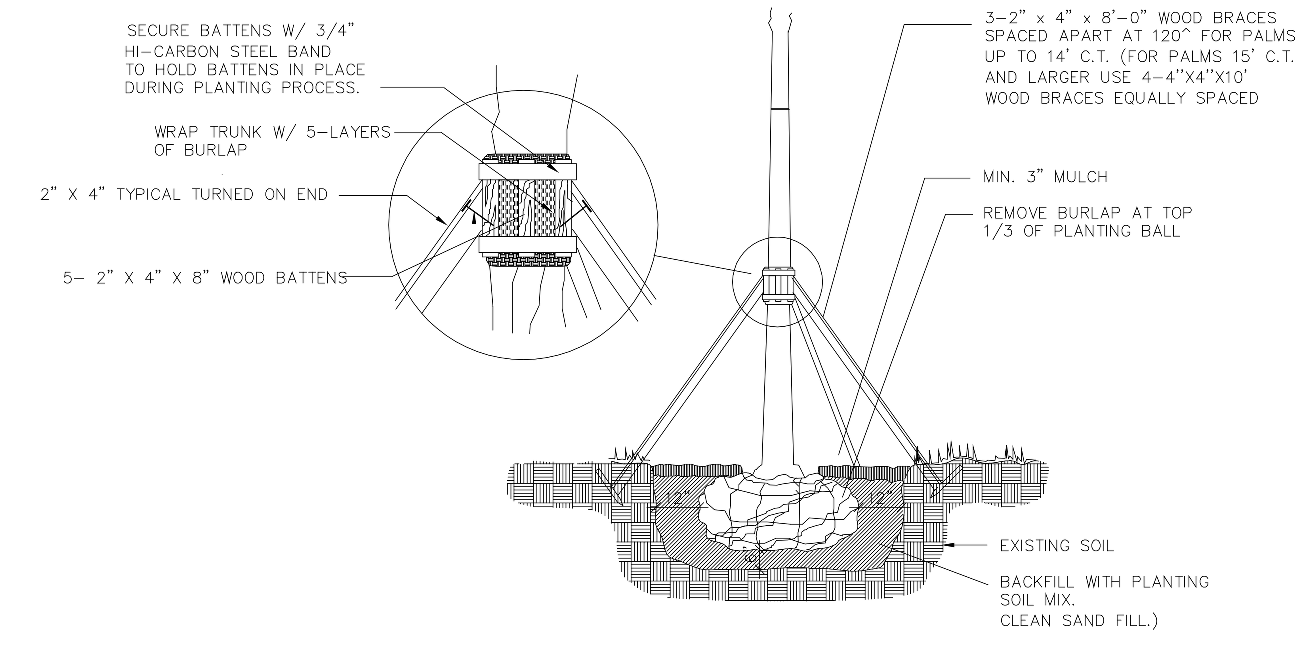

LARGE PALM PLANTING DETAIL

N.T.S.

SPECIAL NOTE:

ALL TREES AND PALMS SHALL RECEIVE SUPERTHRIVE W/ TERRA SORB. APPLY AS PER MANUFACTURER'S RECOMMENDATION

ALL STAKING AND GUYING SHALL BE REMOVED APPROX. 9 MONTHS AFTER PLANTING OR AS DIRECTED BY THE LANDSCAPE ARCHITECT

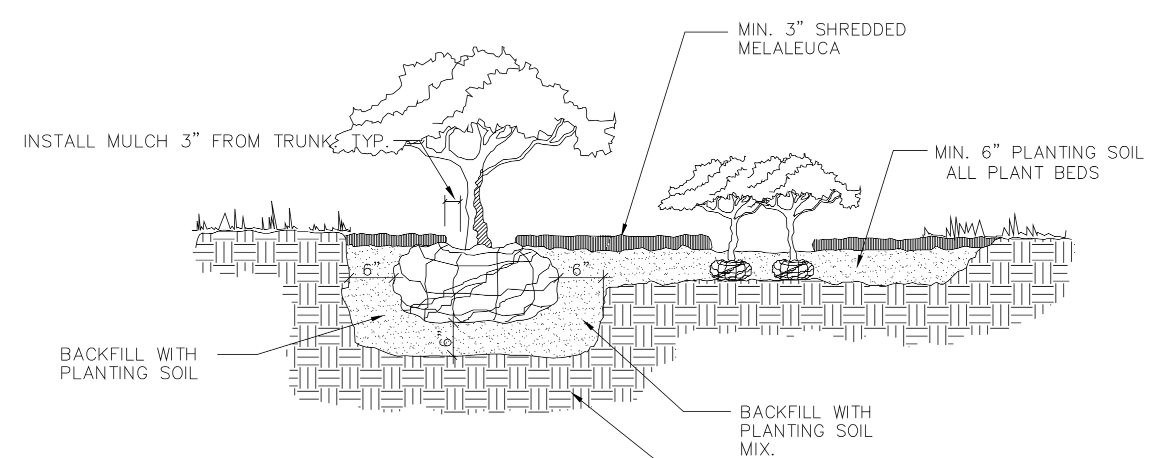

SHRUB AND GROUND COVER DETAIL

N.T.S.

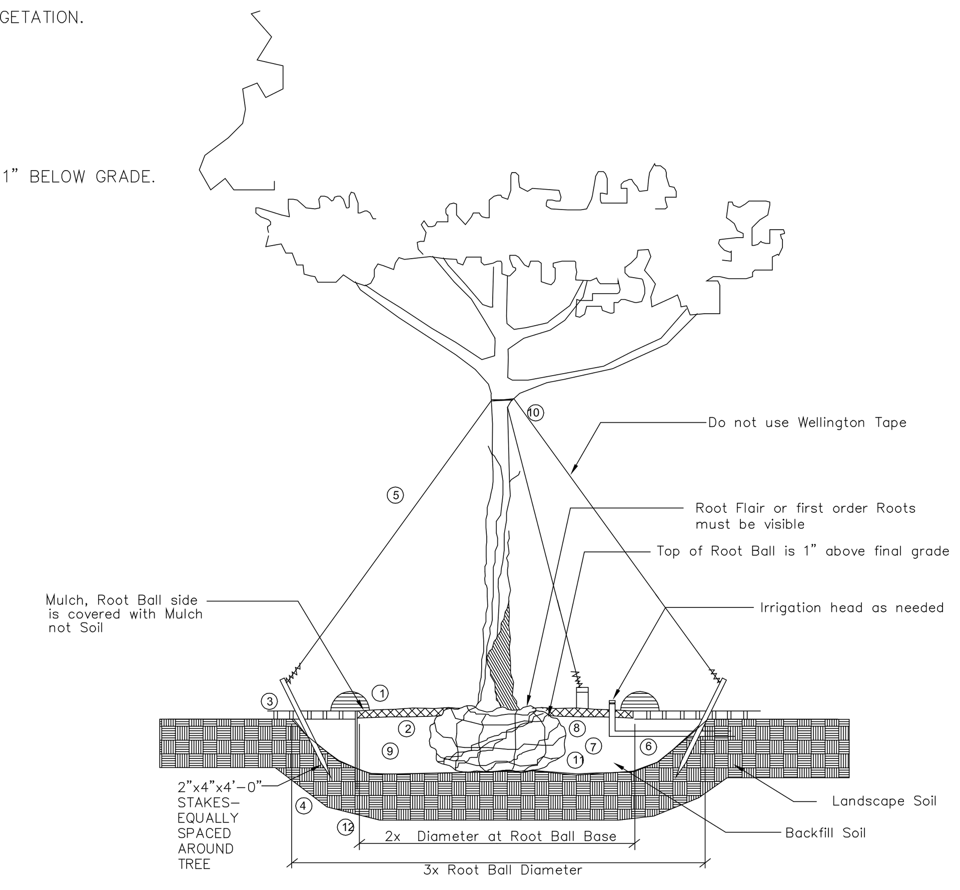

TREE PLANTING DETAIL

N.T.S.

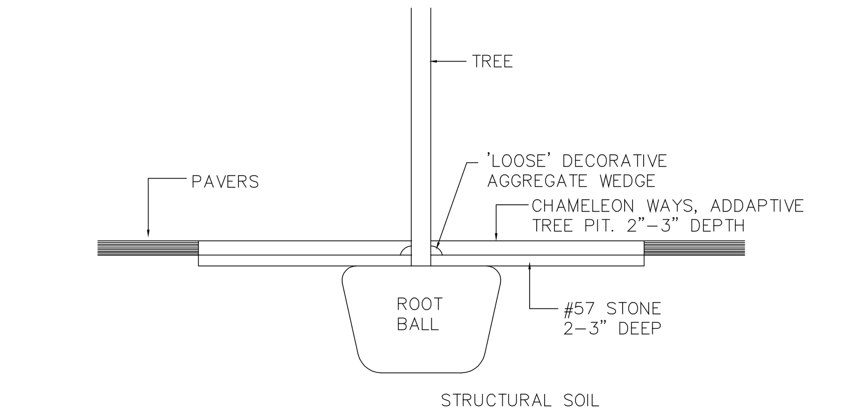

ADDAPAVE POROUS PAVING TREE PIT SYSTEM

N.T.S.

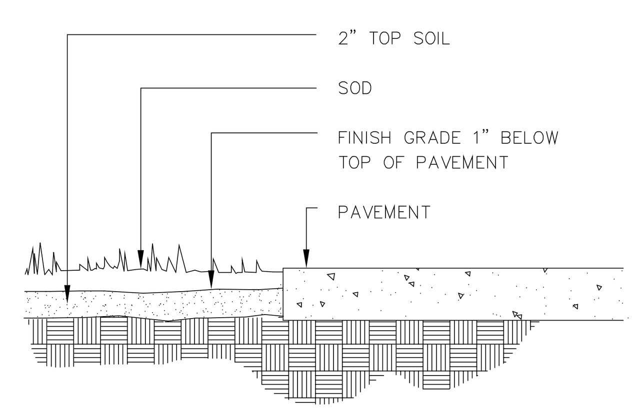

SOD INSTALLATION DETAIL (TYP.)

N.T.S.

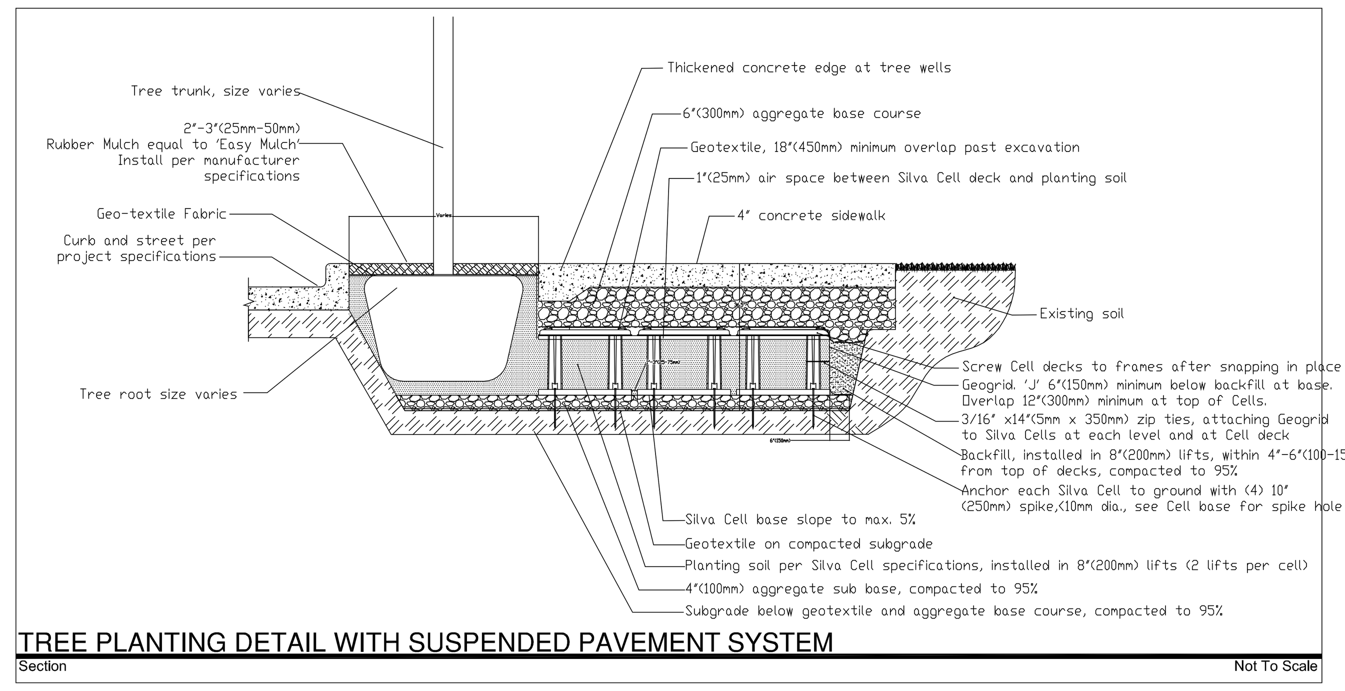

TREE PLANTING DETAIL WITH SUSPENDED PAVEMENT SYSTEM

Section | Not To Scale

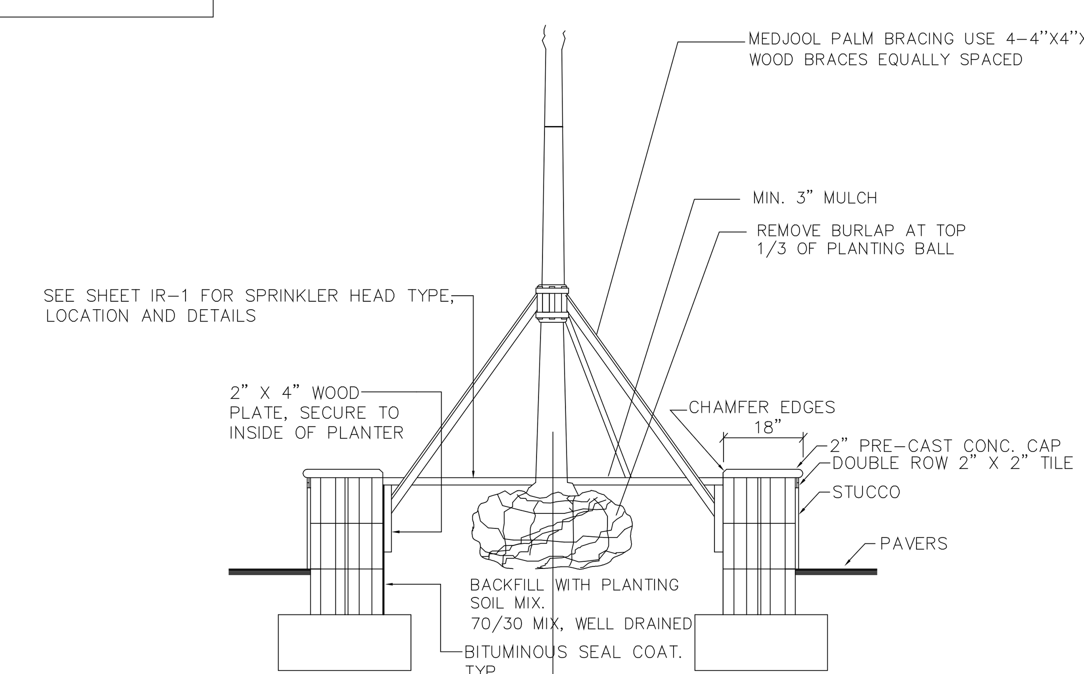

MEDJOOL PALM IN RAISED PLANTER DETAIL

N.T.S.

SPECIAL LANDSCAPE NOTES:

STREET TREES SHALL NOT BE PLACED ON TOP OR WITHIN (5') FIVE FEET OF EITHER SIDE OF ANY CITY OWNED UTILITY INFRASTRUCTURE. NO TREES, SHRUBBERY OR OBSTRUCTION SHALL BE PLACED WITHIN A 3' RADIUS OF A CITY OWNED SEWER LATERAL, CLEANOUT, OR WATER &/OR REUSE METER.

PLANT SPACING SHALL SUPERCEDE PLANT QUALITY TO FILL THE BEDS.

A PRE-CONSTRUCTION MEETING WITH URBAN FORESTRY IS REQUIRED BEFORE ANY PLANT MATERIAL IS INSTALLED ON SITE.

ALL ROAD ROCK, CONCRETE, ASPHALT, AND OTHER NON NATURAL MATERIAL SHALL BE REMOVED AND BE REPLACED WITH WITH PLANTING SOIL PRIOR TO LANDSCAPE INSTALLATION

ALL TREE WORK WILL REQUIRE PERMITTING BY A REGISTERED BROWARD COUNTY TREE TRIMMER

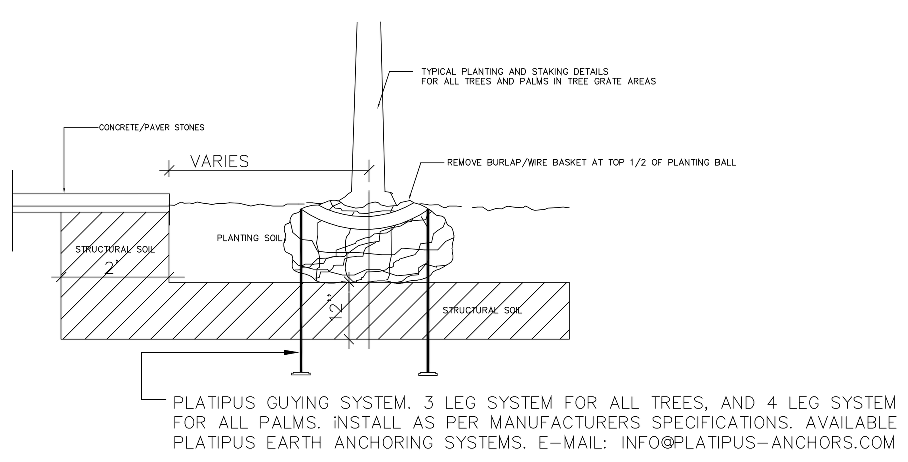

PLATIPUS GUYING SYSTEM. 3 LEG SYSTEM FOR ALL TREES, AND 4 LEG SYSTEM FOR ALL PALMS. INSTALL AS PER MANUFACTURERS SPECIFICATIONS. AVAILABLE PLATIPUS EARTH ANCHORING SYSTEMS. E-MAIL: INFO@PLATIPUS-ANCHORS.COM

LARGE TREE AND PALM STAKING/STRUCTURAL SOIL DETAIL

N.T.S.

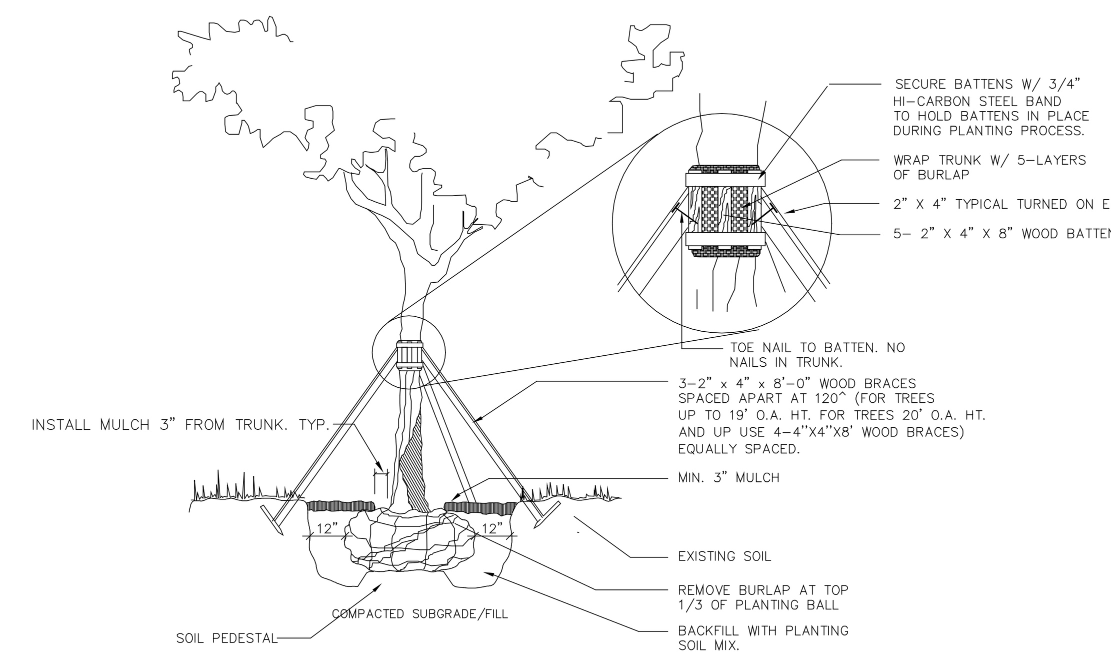

LARGE TREE PLANTING DETAIL

N.T.S.

MICHAEL FAY: LANDSCAPE ARCHITECT
REG.# 540
420 N.W. 7th ST., DELRAY BCH., FL. 33444
PH. 561-306-4003

LANDSCAPE ARCHITECT: MICHAEL FAY, A.S.L.A. REG. NO. 540 DATE:

Digitally signed by Michael Fay Date: 2020.08.18 09:30:45

AAC
PZ20-12000005
1/5/2021

DATE: 1-29-20
DRAWN BY: M. FAY
CHECKED BY:
CAD FILE:

REVISIONS:
6-24-20
8-18-20

PROJECT:
ATLANTIC 3350
3350 ATLANTIC BLVD.
POMPANO BEACH, FLORIDA

LANDSCAPE DETAILS & SPECS.

SHEET NO. L-3
OF 3
DRAWING FILE NO.